Revised 2021.04

nel lusso®

BAJA
www.worldstoneimports.com
480 590 2231

SINK SPECIFICATIONS

STAINLESS STEEL DOUBLE BOWL (60/40) KITCHEN SINK
MODEL SS-DB-04L (LEFT SIDE LARGER)

FEATURES

- **KITCHEN Stainless Steel DOUBLE Bowl (60/40)**
- **UNDER Mount**
- **304 18/8 Chromium/Nickel content**
- **Radius corners**
- **Long-lasting, easy-to-clean, satin finish**
- **Sound-deadening insulation**
- **Rear drain placement**

DIMENSIONS

- **Overall Size: 31-3/4” x 20-5/8”**
- **Overall Bowl Size: 30” x 18-3/4”**
- **Bowl Sizes: LEFT 15-3/4” x 18-3/4”/ RIGHT 13”x 16-1/2”**
- **Depth: 9” / 7”**
- **Available Thickness: 16ga and 18ga**
- **Template included**
- **Fixing clips included**
- **Strainer and grid sold separately**

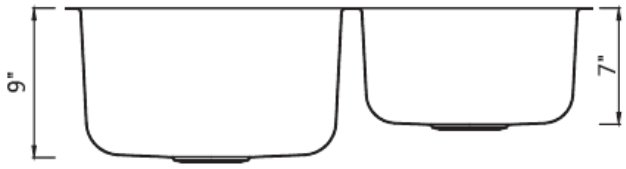

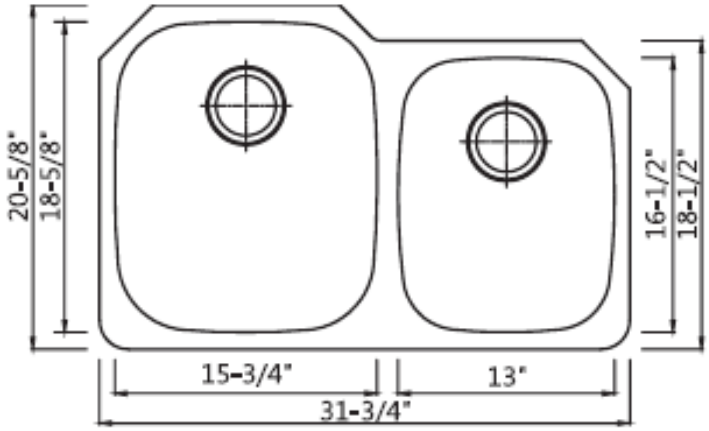

NOTE

- **All dimensions are approximate and subject to change.**